Mobile Crane/Grue mobile
LTM 1055-3.2

LIEBHERR

Table of content
Tables des matières

Technical Data/Caractéristiques technique	
Dimensions/Encombrement	3
Mobile Crane/Grue mobile	4 – 5
Weights/Poids Working speeds/Vitesses	6
Counterweight/Contrepoids	7
Boom/jib combinations/Configurations de flèche	8
T	9 – 15
TK	16 – 22
TK	23 – 26
Equipment/Equipement	27 – 28
Description of symbols/Explication des symboles	29

Dimensions
Encombrement

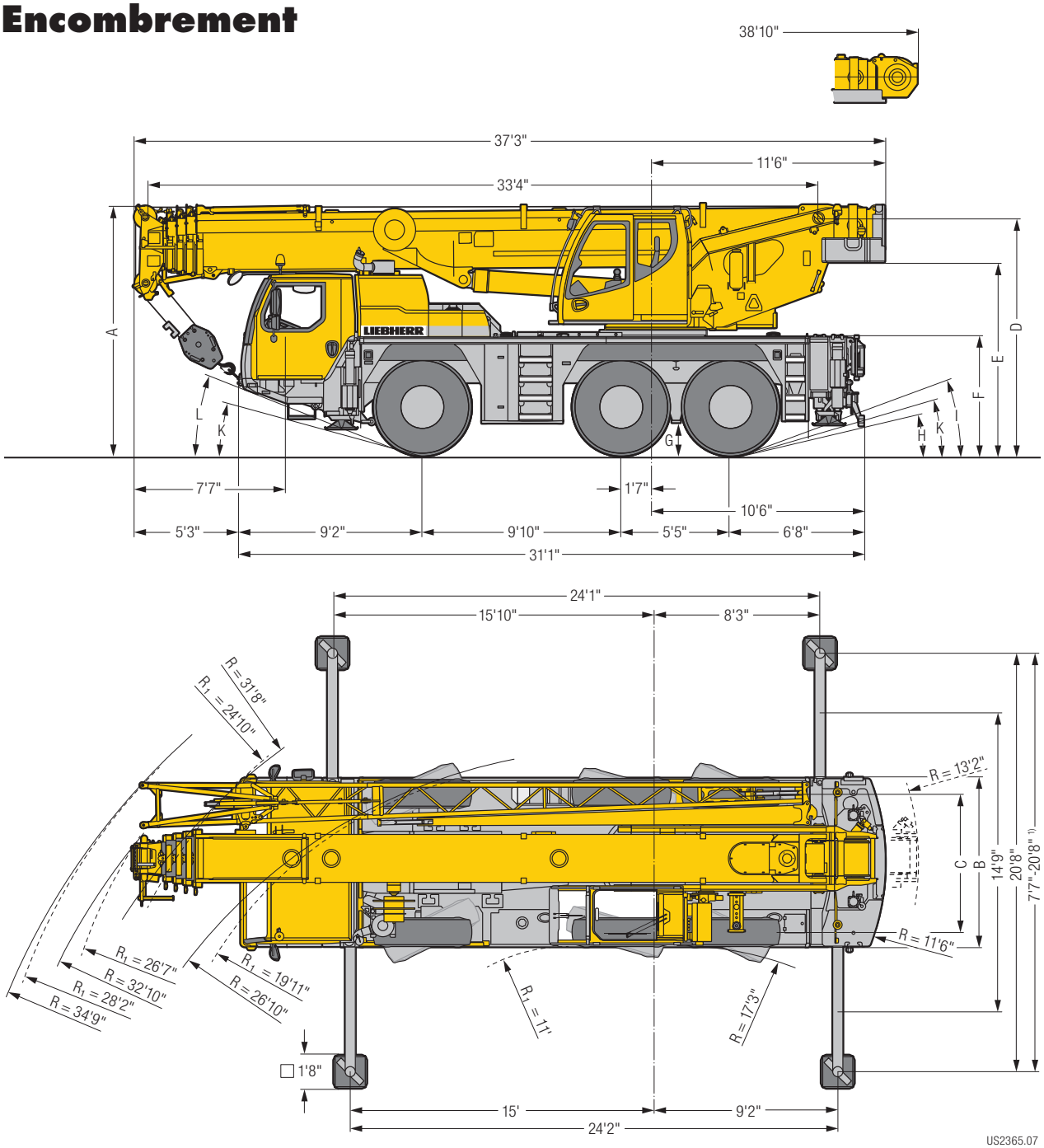

US2365.07

R_1 = All-wheel steering · Direction toutes roues

1) only with VarioBase® · seulement avec VarioBase®

Dimensions/Encombrement

	A	A 4 "*	B	C	D	E	F	G	H	I	K	L
445/95 R 25 (16.00 R 25)	12'4"	12'	8'4"	6'11"	11'8"	9'5"	5'9"	1'5"	12°	20°	15°	21°
525/80 R 25 (20.5 R 25)	12'4"	12'	8'10"	7'1"	11'8"	9'5"	5'9"	1'5"	12°	20°	15°	21°

* lowered · abaissé

Mobile Crane/Grue mobile
LTM 1055-3.2

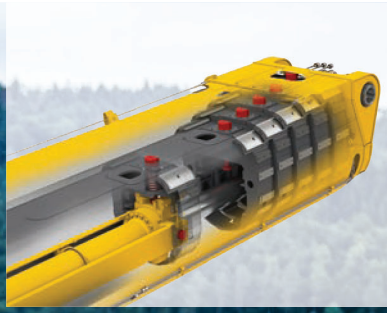

Proven single cylinder telescoping system TELEMATIK

Système de télescopage à un vérin confirmé TELEMATIK

Weights
Poids

Hook block/Moufles à crochet

Load lbs Forces de levage lbs	No. of sheaves Poulies	No. of lines Brins	Weight lbs Poids lbs
121,250	7	14	880
101,630	5	10	880
66,580	3	7	620
29,320	1	3	400
9,920	–	1	165

Working speeds
Vitesses

Crane carrier/Châssis porteur

	mph min.	mph max.	%
445/95 R 25 (16.00 R 25) 525/80 R 25 (20.5 R 25)	0.4	53	61.4 %

Theorical gradeability/Aptitude théorique en pente

	12 / R2
	4 / R2

Crane superstructure/Partie tournante

Drive Mécanismes	infinitely variable en continu	Rope diameter / length Diamètre / Longueur du câble	Max. single line pull Effort au brin maxi.
①	0 – 427 ft/min single line ft/min au brin simple	0.59" / 722 ft	10,100 lbs
②	0 – 427 ft/min single line ft/min au brin simple	0.59" / 722 ft	10,100 lbs
360°	0 – 1.6 rpm		
	approx. 60 seconds to reach 83° boom angle env. 60 s jusqu'à 83°		
	approx. 240 seconds for boom extension from 33 ft – 131 ft env. 240 s pour passer de 33 ft – 131 ft		

Counterweight
Contrepoids

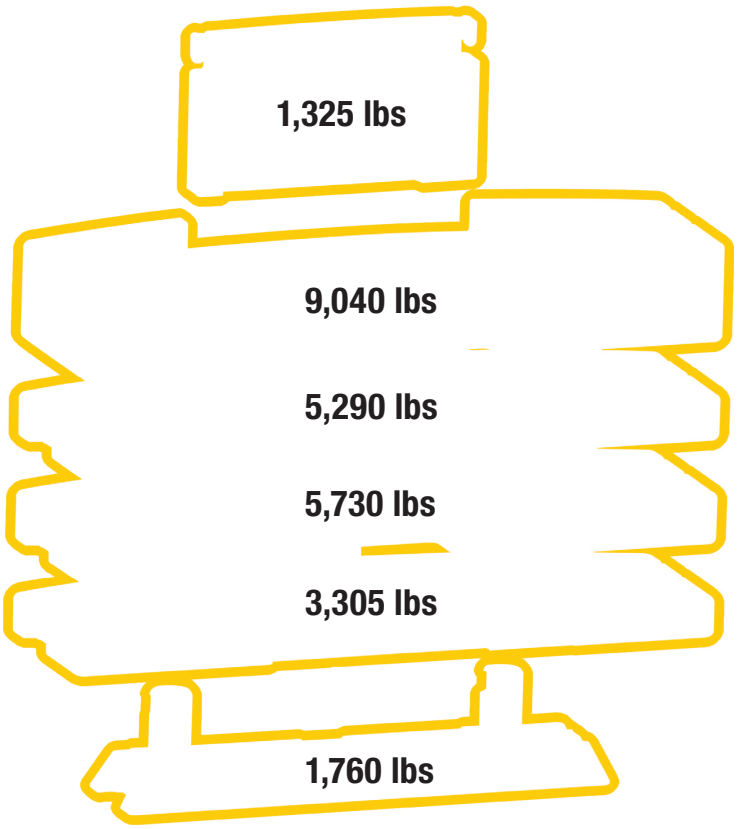

Technically transportable · Transport techniquement simplifié

Axle/Essieu

Axle Essieu	1	2	3	Total weight lbs Poids total lbs
lbs	26,400	26,400	26,400	79,200[1)]

[1)] with 12,125 lbs counterweight · avec contrepoids 12,125 lbs

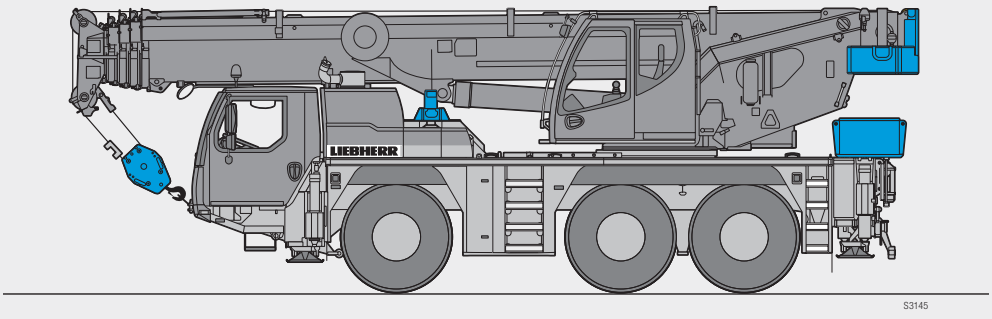

BALTIMORE, MARYLAND CRANE RENTAL
8200 Fisher Road, Suite 100 - Baltimore, MD 21222
WASHINGTON D.C. CRANE RENTAL
9701 Fallard Terrace, Upper Marlboro, MD 20772

Boom/jib combinations
Configurations de flèche

T Telescopic boom/Flèche télescopique

K Mechanical swing away jib/Fléchette pliante mécanique

K Mechanically adjustable assembly jib/
Fléchette de montage réglable mécaniquement

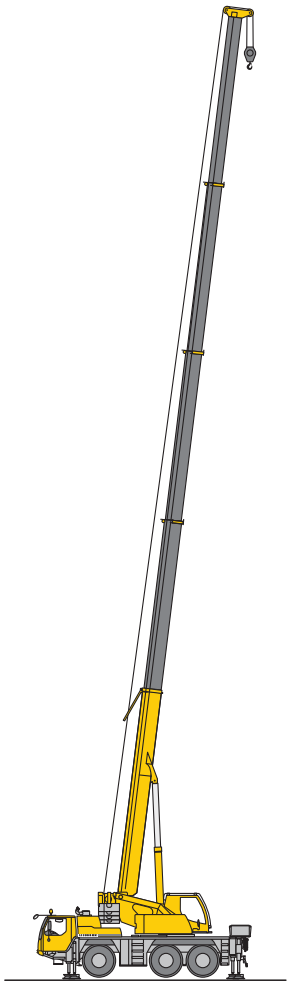

T
9 – 15

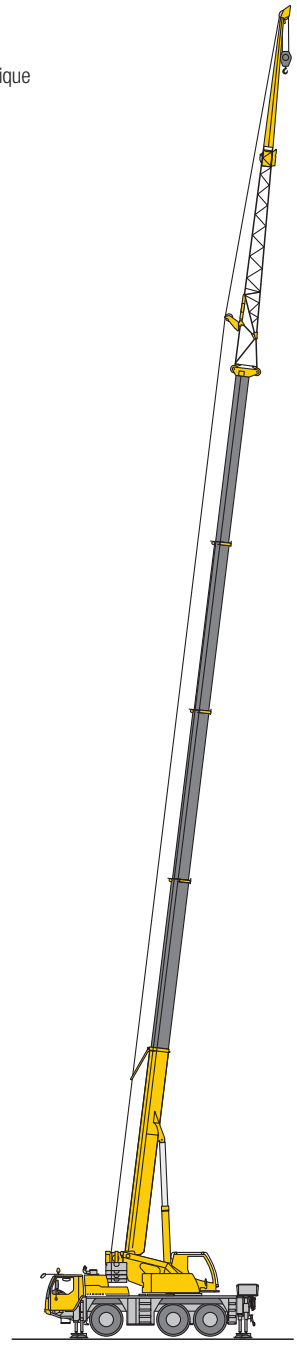

TK
16 – 22

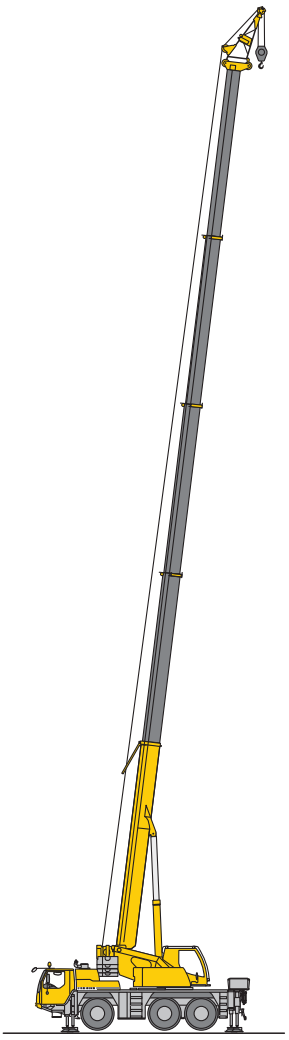

TK
23 – 26

S3146

ML CRANE GROUP
UNITED
CRANE & RIGGING
BALTIMORE, MARYLAND
410-285-6363
WASHINGTON D.C.
301-909-0516
WWW.UNITEDCRANEANDRIGGING.COM

Lifting capacities
Forces de levage

T

	33 ft *		45 ft	56 ft	67 ft	78 ft	90 ft	101 ft	112 ft	123 ft	131 ft	
9	121.3											9
10	121.3	93.3	93.3	93.3	92.7	74.3	55.4					10
11	121.2	93.3	93.3	93.3	91.8	74.8	56					11
12	107.3	93.3	93.3	92.4	89.1	75.3	56.6					12
13	100.2	93.3	92.2	87.2	83.5	75.1	57.1	45.6				13
14	93.6	92.3	89.5	82.5	78.4	74.2	57.4	46				14
15	87.6	87.6	84.6	78.8	74.9	72.3	57.6	46.4	35.8			15
16	82.8	82.8	80.9	76.2	71.6	68.2	57.4	46.5	36.1			16
17	79.4	79.4	77.1	72.7	68.9	65.6	56.5	46.1	36.3			17
18	76	75.9	74.3	70.5	66.9	63.5	55.4	45.6	36.5	28.4		18
19	72.7	72.4	71.7	68.5	64.9	61.5	54.2	45.1	36.4	28.5	24.3	19
20	69.5	68.8	69	66.6	62.9	59.7	52.9	44.3	36.3	28.5	24.4	20
22	62.6	61.8	62.5	60	58	54.5	50.2	42.4	35.5	28.5	24.5	22
24	53.6	53.6	56.9	54.7	51.9	48.7	45.9	40.6	34.5	28.1	24.5	24
26			51.4	49.3	46.8	44.1	41.6	38.9	33.5	27.5	24.1	26
28			46.5	44.8	42.6	40.2	38.6	36.6	32.4	26.8	23.8	28
30			42.3	40.9	39	36.8	36	33.6	31.4	26.1	23.3	30
32			38.5	37.7	35.9	34	33.6	31	30.1	25.4	22.9	32
34			35	34.8	33.2	31.7	31.1	29.2	28.3	24.7	22.2	34
36			31.9	32.4	30.8	30.2	29	27.8	26.3	24	21.5	36
38				30	28.7	28.6	27.1	25.9	24.6	23.3	20.8	38
40				27.8	27	26.8	25.4	24.3	23	22.6	20.2	40
45				23.3	23.1	23.1	21.8	21.5	20.8	19.8	18.8	45
50					20.2	20.2	18.9	18.7	18.2	17.2	16.9	50
55					17.8	17.4	16.9	16.5	16	15	14.8	55
60						15.2	15.3	14.7	14.1	13.2	13	60
65						13.4	13.5	13.2	12.6	11.7	11.5	65
70						12.2	12	11.7	11.3	10.4	10.3	70
75							10.8	10.4	10.1	9.3	9.2	75
80							9.5	9.1	8.8	8.3	8.2	80
85								8.2	7.9	7.4	7.4	85
90								7.5	7.1	6.6	6.6	90
95									6.5	5.9	5.9	95
100									5.9	5.3	5.3	100
105										4.8	4.7	105
110										4.3	4.3	110
115										3.8	3.8	115
120											3.3	120

* 0° = over rear · sur arrière

t_204_01140_01_000 / t_204_01142_01_000

BALTIMORE, MARYLAND CRANE RENTAL
8200 Fisher Road, Suite 100 - Baltimore, MD 21222
WASHINGTON D.C. CRANE RENTAL
9701 Fallard Terrace, Upper Marlboro, MD 20772

Lifting capacities
Forces de levage

T

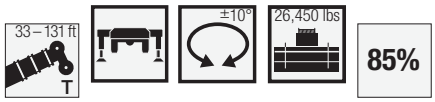

	33 ft	45 ft	56 ft	67 ft	78 ft	90 ft	101 ft	112 ft	123 ft	131 ft	
10	93.3	93.3	93.1	84.2	67.6	50.3					10
11	93.3	93.3	92.4	83.7	68	50.9					11
12	93.3	93.3	92.2	83	68.4	51.5					12
13	93.2	92.2	86.9	81.8	68.3	51.9	41.4				13
14	92.2	89.5	82.5	78.2	67.9	52.2	41.8				14
15	87.5	84.6	78.8	73.8	67.5	52.3	42.1	32.6			15
16	82.8	80.2	75.3	70.3	67.1	52.1	42.2	32.8			16
17	79.3	77.1	72.1	68.5	65.5	51.4	41.9	33			17
18	75.8	74.3	70.5	66.6	63.5	50.4	41.5	33.2	25.8		18
19	72.2	71.7	68.5	64.7	61.5	49.3	41	33.1	25.9	22.1	19
20	69	69.2	66.6	62.6	59.7	48.1	40.3	33	25.9	22.2	20
22	61.9	62.7	60	58.1	54.5	45.6	38.6	32.2	25.9	22.2	22
24	52.9	53.9	53.3	51.9	48.7	43.4	36.9	31.4	25.5	22.3	24
26		47.6	47.5	46.8	44.1	40.9	35.4	30.5	25	22	26
28		42.2	42.9	42.5	40.2	37.8	33.9	29.5	24.4	21.6	28
30		37.8	38.4	38.4	36.8	34.8	32.4	28.5	23.7	21.2	30
32		34.1	34.8	34.6	33.8	32.7	30.8	27.6	23.1	20.8	32
34		31	31.5	31.5	31	30.6	28.7	26.6	22.5	20.2	34
36		28.3	28.9	28.9	28.3	28.9	26.7	25.7	21.8	19.5	36
38			26.7	26.6	26.4	26.8	24.9	24.4	21.2	18.9	38
40			24.6	24.6	25.1	24.8	23.7	23	20.6	18.4	40
45			20.6	20.5	21.2	20.7	20.4	19.7	19	17.2	45
50				18.2	18.1	17.6	17.8	17.6	17.2	16	50
55				15.8	15.7	15.4	15.4	15.4	15	14.8	55
60					13.7	13.9	13.6	13.4	13	13	60
65					12.2	12.3	12.1	11.9	11.4	11.4	65
70					11	11	10.7	10.5	10.1	10	70
75						9.9	9.6	9.4	8.9	8.8	75
80						8.9	8.6	8.4	7.9	7.9	80
85							7.8	7.6	7.1	7.1	85
90							7	6.8	6.3	6.3	90
95								6.1	5.6	5.6	95
100								5.5	5	5	100
105									4.5	4.5	105
110									4	4	110
115									3.6	3.6	115
120										3.2	120

t_204_12001_00_000

ML CRANE GROUP
UNITED
CRANE & RIGGING
BALTIMORE, MARYLAND
410-285-6363
WASHINGTON D.C.
301-909-0516
WWW.UNITEDCRANEANDRIGGING.COM

Lifting capacities
Forces de levage

T

	33 ft	45 ft	56 ft	67 ft	78 ft	90 ft	101 ft	112 ft	123 ft	131 ft	
10	93.3	93.3	93.3	92.7	74.3	55.4					10
11	93.3	93.3	93.3	91.8	74.8	56					11
12	93.3	93.3	92.4	89.1	75.3	56.6					12
13	93.3	92.2	87.2	83.5	75.1	57.1	45.6				13
14	92.3	89.5	82.5	78.4	74.2	57.4	46				14
15	87.5	84.6	78.8	74.9	72.1	57.6	46.4	35.8			15
16	82	80.8	75.1	71.4	66.6	57.4	46.5	36.1			16
17	77.1	75.7	69.9	66.8	61.7	55.7	46.1	36.3			17
18	72.4	69.4	65.7	62	57.3	53.1	45.6	36.5	28.4		18
19	67.9	64.6	61.4	57.7	53.4	49.9	45.1	36.4	28.5	24.3	19
20	63.6	60.4	57.4	53.8	49.9	47.6	43.6	36.3	28.5	24.4	20
22	55.6	52.7	50.3	47.4	44.6	42.9	39.6	35.5	28.5	24.5	22
24	48.5	46.6	44.6	42.2	39.9	38.7	36.3	34.2	28.1	24.5	24
26		41.7	40.1	38	37.2	35.2	33.3	31.4	27.5	24.1	26
28		37.6	36.3	34.5	34.1	31.9	30.4	28.6	26.8	23.8	28
30		34.3	33.1	31.5	31.2	29.3	28.3	27.2	25.6	23.3	30
32		31.1	30.4	29.6	28.7	26.9	26.2	25.3	23.8	22.7	32
34		28.2	28	27.7	26.4	25.1	24.3	23.4	22	21.5	34
36		25.7	25.9	25.6	24.4	23.8	22.7	21.7	20.4	19.9	36
38			24.1	23.8	22.7	22.2	21.1	20.2	19	18.5	38
40			22.3	22.2	21.1	20.7	19.7	18.8	17.7	17.3	40
45			18.2	18.8	18.1	17.6	16.7	16	14.9	14.7	45
50				15.7	15.6	15.2	14.3	13.7	12.8	12.5	50
55				13.5	13.4	13.2	12.5	11.9	11	10.8	55
60					11.6	11.6	10.9	10.4	9.5	9.4	60
65					10.1	9.9	9.5	9.1	8.3	8.2	65
70					8.8	8.7	8.3	8	7.2	7.1	70
75						7.7	7.3	7	6.4	6.2	75
80						6.9	6.5	6.2	5.6	5.5	80
85							5.8	5.5	4.9	4.8	85
90							5.2	4.9	4.3	4.2	90
95								4.3	3.7	3.7	95
100								3.8	3.2	3.2	100
105									2.7	2.7	105
110									2.3	2.3	110
115									1.9	1.9	115
120										1.6	120

t_204_01143_01_000

BALTIMORE, MARYLAND CRANE RENTAL
8200 Fisher Road, Suite 100 - Baltimore, MD 21222
WASHINGTON D.C. CRANE RENTAL
9701 Fallard Terrace, Upper Marlboro, MD 20772

ML CRANE GROUP
UNITED
CRANE & RIGGING
BALTIMORE, MARYLAND
410-285-6363
WASHINGTON D.C.
301-909-0516
WWW.UNITEDCRANEANDRIGGING.COM

Lifting capacities
Forces de levage

T

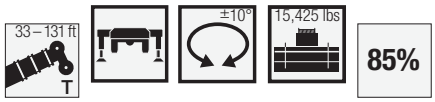

	33 ft	45 ft	56 ft	67 ft	78 ft	90 ft	101 ft	112 ft	123 ft	131 ft	
10	93.3	93.3	93.1	84.2	67.6	50.3					10
11	93.3	93.3	92.4	83.7	68	50.9					11
12	93.3	93.3	92.2	83	68.4	51.5					12
13	93.2	92.2	86.9	81.8	68.3	51.9	41.4				13
14	91.6	89.5	82.5	78.2	67.9	52.2	41.8				14
15	86.4	84.6	78.8	73.8	67.4	52.3	42.1	32.6			15
16	81.7	79.8	74	70.3	65.8	52.1	42.2	32.8			16
17	77.2	75.8	69.3	66.7	61.7	51.4	41.9	33			17
18	72.3	69.4	64.8	62	57.3	50.3	41.5	33.2	25.8		18
19	66.5	64.1	59.8	57.7	53.4	49	41	33.1	25.9	22.1	19
20	60.6	59.5	56.5	53.8	49.9	46.6	40.3	33	25.9	22.2	20
22	50.4	52.2	50.3	47.4	44.3	41.9	38.6	32.2	25.9	22.2	22
24	42.9	44.7	44.6	42.3	39.5	37.9	35.5	31.4	25.5	22.3	24
26		38.9	39.7	38	35.8	35.2	32.1	30.4	25	22	26
28		34.3	35	34.5	32.9	32	30	28.7	24.4	21.6	28
30		30.6	31.3	31.2	31	29.4	28	26.3	23.7	21.2	30
32		27.5	28.2	28.1	28.7	27	25.7	24.2	23.1	20.8	32
34		24.9	25.5	25.6	26.3	25	24	23	22.1	20.2	34
36		22.7	23.5	24.2	24	23.2	22.8	21.9	20.8	19.5	36
38			21.6	22.2	22.1	21.5	21.2	20.6	19.4	18.8	38
40			19.9	20.6	20.4	20.3	19.9	19.2	18.1	17.8	40
45			16.5	17.1	17	17.2	16.9	16.5	15.4	15.2	45
50				14.5	14.5	14.6	14.3	14.1	13.3	13.1	50
55				12.5	12.6	12.6	12.3	12.1	11.5	11.4	55
60					10.9	11	10.7	10.5	10	9.9	60
65					9.6	9.6	9.3	9.1	8.5	8.4	65
70					8.5	8.5	8.2	8	7.4	7.4	70
75						7.5	7.3	7	6.5	6.4	75
80						6.8	6.4	6.2	5.7	5.7	80
85							5.7	5.5	5	5	85
90							5.1	4.8	4.3	4.4	90
95								4.2	3.8	3.8	95
100								3.7	3.3	3.3	100
105									2.8	2.8	105
110									2.4	2.4	110
115									2.1	2	115
120										1.7	120

t_204_12003_00_000

BALTIMORE, MARYLAND CRANE RENTAL
8200 Fisher Road, Suite 100 - Baltimore, MD 21222
WASHINGTON D.C. CRANE RENTAL
9701 Fallard Terrace, Upper Marlboro, MD 20772

ML CRANE GROUP
UNITED
CRANE & RIGGING
BALTIMORE, MARYLAND
410-285-6363
WASHINGTON D.C.
301-909-0516
WWW.UNITEDCRANEANDRIGGING.COM

Lifting capacities
Forces de levage

T

	33 ft	45 ft	56 ft	67 ft	78 ft	90 ft	101 ft	112 ft	123 ft	131 ft	
10	93.3	93.3	93.1	84.2	67.6	50.3					10
11	93.3	93.3	92.4	83.7	68	50.9					11
12	93	91.9	92.2	83	68.4	51.5					12
13	88.9	88.9	86.9	81.8	68.3	51.9	41.4				13
14	83.8	83.7	81.8	77.3	67.9	52.2	41.8				14
15	78.2	78.3	76.1	71	67.1	52.3	42.1	32.6			15
16	73.3	74	70.2	67.6	62.2	52.1	42.2	32.8			16
17	68.7	69.4	65.3	62.5	57.7	51.2	41.9	33			17
18	64.2	64.8	60.6	58	53.5	49.6	41.5	33.2	25.8		18
19	60.2	59.9	57.5	54	49.9	46.4	41	33.1	25.9	22.1	19
20	55.9	56.3	53.7	50.3	46.6	43.8	40.2	33	25.9	22.2	20
22	47.1	48.8	47	44.3	41.3	39.8	36.8	32.2	25.9	22.2	22
24	40	41.8	41.7	39.4	37.2	36.1	33	31.2	25.5	22.3	24
26		36.3	37.1	35.4	34.6	32.7	30.9	29	25	22	26
28		32	32.7	32.1	31.7	29.6	28	26.2	24.4	21.6	28
30		28.5	29.2	29.1	28.9	27	25.8	24.8	23.4	21.2	30
32		25.6	26.4	26.8	26.4	24.7	24	23.2	21.8	20.7	32
34		23.1	23.9	24.6	24.3	22.8	22.3	21.5	20.1	19.6	34
36		20.9	21.7	22.4	22.3	21.8	20.8	19.8	18.6	18.2	36
38			19.8	20.5	20.3	20.4	19.3	18.4	17.3	16.9	38
40			18.2	18.9	18.7	18.9	18	17.1	16	15.7	40
45			14.9	15.5	15.5	15.6	15.2	14.5	13.5	13.2	45
50				13	13	13.1	12.8	12.4	11.5	11.3	50
55				11.1	11.1	11.2	10.9	10.7	9.8	9.7	55
60					9.6	9.6	9.3	8.9	8.3	8.2	60
65					8.3	8.3	8	7.7	7.1	7.1	65
70					7.3	7.3	7	6.7	6.1	6.1	70
75						6.4	6.1	5.8	5.3	5.2	75
80						5.7	5.3	5.1	4.6	4.5	80
85							4.6	4.4	3.9	3.9	85
90							4	3.8	3.3	3.3	90
95								3.3	2.8	2.8	95
100								2.8	2.3	2.3	100
105									1.9	1.9	105

t_204_01009_00_000

Remarks referring to load charts

1. The lifting capacities do not exceed 85 % of the tipping load according to ASME B 30.5. The crane's structural steelwork is in accordance with EN 13000 and ASME B 30.5.
2. For the calculation of the load charts at least a wind speed of 30 ft/s (9 m/s, 20 mph) and regarding the load a sail area of 1 m^2 per ton load and a wind resistance coefficient of 1.2 on the load have been taken into account. For lifting of loads with large sail areas and/or high wind resistance coefficients the maximum wind speed as stated in the load charts has to be reduced.
3. Lifting capacities are given in kips.
4. The weight of the hook blocks and hooks must be deducted from the lifting capacities.
5. Working radii are measured from the slewing centre.
6. The lifting capacities given for the telescopic boom only apply if the folding jib is taken off.
7. Lifting capacities above 93,300 lbs only with additional pulley block.
8. The data of this brochure serves only for general information. All information is provided without warranty. Instructions for the correct commissioning of the crane please take from the operation manual and the load chart book.

Remarques relatives aux tableaux des charges

1. La capacité de charge ne doit pas dépasser 85 % de la charge de basculement conformément à ASME B 30.5. La structure métallique de la grue est conforme à EN 13000 et ASME B 30.5.
2. Une vitesse de vent de 30 ft/s (9 m/s, 20 mph) minimum, une surface de prise au vent de 1 m^2 par tonne ainsi qu'un coefficient de résistance au vent de la charge 1,2 sont pris en compte pour le calcul des tableaux de charge. Lorsque des charges ayant une surface de prise au vent et/ou un coefficient de résistance au vent plus élevé(e)(s) sont levées, la vitesse de vent maximale indiquée dans les tableaux de charge doit être réduite.
3. Les forces de levage sont données en kips.
4. Les poids des moufles et crochets doit être soustrait des charges indiquées.
5. Les portées sont calculées à partir de l'axe de rotation.
6. Les forces indiquées pour la flèche télescopique s'entendent fléchette dépliable déposée.
7. Forces de levage plus de 93,300 lbs seulement avec moufle additionnel.
8. Les données de cette brochure sont données à titre informatif. Ces renseignements sont sans garantie. Les consignes relatives à la bonne mise en service de la grue sont disponibles dans le manuel d'utilisation et le manuel de tableaux de charge.

BALTIMORE, MARYLAND CRANE RENTAL
8200 Fisher Road, Suite 100 - Baltimore, MD 21222
WASHINGTON D.C. CRANE RENTAL
9701 Fallard Terrace, Upper Marlboro, MD 20772

Lifting capacities
Forces de levage

T

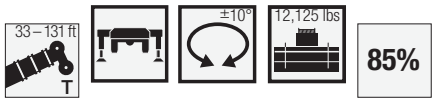

	33 ft	45 ft	56 ft	67 ft	78 ft	90 ft	101 ft	112 ft	123 ft	131 ft	
10	93.3	93.3	93.1	84.2	67.6	50.3					10
11	93.3	93.3	92.4	83.7	68	50.9					11
12	93.3	93.3	92.2	83	68.4	51.5					12
13	93.1	92.2	86.9	81.8	68.3	51.9	41.4				13
14	90.8	89.5	81.8	77.3	67.9	52.2	41.8				14
15	85.7	83.6	76.1	71	67.1	52.3	42.1	32.6			15
16	80.8	76.5	70.2	67.6	62.2	52.1	42.2	32.8			16
17	75.7	70.9	65.3	62.5	57.7	51.2	41.9	33			17
18	69.9	64.9	60.6	58	53.5	49.6	41.5	33.2	25.8		18
19	62.6	59.9	57.5	54	49.9	46.4	41	33.1	25.9	22.1	19
20	56.6	56.3	53.7	50.3	46.6	43.8	40.2	33	25.9	22.2	20
22	47.1	48.8	47	44.3	41.3	39.8	36.8	32.2	25.9	22.2	22
24	40	41.8	41.7	39.4	37.2	36.1	33	31.2	25.5	22.3	24
26		36.3	37.1	35.4	34.6	32.8	31	29.1	25	22	26
28		32	32.7	32.1	31.8	29.7	28.3	26.6	24.4	21.6	28
30		28.5	29.2	29.1	29.1	27.3	26	24.9	23.7	21.2	30
32		25.6	26.4	26.8	26.7	25.1	24.5	23.6	22.3	20.8	32
34		23.2	23.9	24.7	24.5	23.1	22.8	22	20.6	20	34
36		21.1	21.9	22.5	22.4	22.1	21.3	20.4	19.2	18.8	36
38			20.1	20.7	20.5	20.7	19.9	19.1	17.9	17.5	38
40			18.5	19.1	19	19.2	18.6	17.8	16.7	16.4	40
45			15.3	15.9	15.9	16	15.7	15.2	14.2	13.9	45
50				13.4	13.5	13.5	13.2	13	12.2	12	50
55				11.6	11.6	11.6	11.3	11.2	10.5	10.3	55
60					10	10.1	9.8	9.5	8.9	8.8	60
65					8.8	8.8	8.5	8.2	7.7	7.6	65
70					7.8	7.8	7.5	7.2	6.7	6.6	70
75						6.9	6.6	6.3	5.8	5.7	75
80						6.1	5.8	5.5	5.1	5	80
85							5.1	4.9	4.4	4.4	85
90							4.5	4.2	3.8	3.8	90
95								3.7	3.2	3.2	95
100								3.2	2.7	2.7	100
105									2.3	2.3	105
110									1.9	1.9	110
115									1.6	1.6	115

t_204_12004_00_000

	33 ft				45 ft				
	0°			360°	0°			360°	
	26,450 lbs	15,400 lbs	12,125 lbs	12,125 lbs	26,450 lbs	15,400 lbs	12,125 lbs	12,125 lbs	
10	30,5	22,9	20,6		28,1	21,2	19,2		10
11	28,1	20,9	18,8		26,1	19,6	17,7		11
12	25,4	18,8	16,9		24,3	18,2	16,4		12
13	23	16,9	15,2		22,6	16,8	15,2		13
14	21,1	15,3	13,8		21	15,4	14		14
15	19,3	14	12,6		19,2	14,2	12,9		15
16	17,5	12,9	11,6		17,6	13,1	11,9		16
17	16,1	11,8	10,6		16,3	12,2	11		17
18	14,9	11	9,7		15,1	11,3	10,1		18
19	13,9	10,2	8,7	8,3	14,2	10,5	9,1		19
20	13	9	8,1	7,7	13,3	9,6	8,4		20
22	11,5	7,9	6,8	6,5	11,8	8,3	7,3	6,5	22
24	10,3	6,8	5,6	5,5	10,5	7,3	6,5	5,7	24
26					9	6,4	5,7	5,4	26
28					8,2	5,7	5	4,7	28
30					7,4	5,1	4,2	3,9	30
32					6,8	4,5	3,5	3,2	32
34					6,2	3,8	2,7	2,5	34
36					5,7	3,2	2,3	2,2	36

0° = over rear · sur arrière

t_204_01113_01_000 / 01115_01_000 / 01118_01_000 / 01136_01_001
t_204_13801_01_000 / 13803_01_000 / 13806_01_000 / 13906_01_001

BALTIMORE, MARYLAND CRANE RENTAL
8200 Fisher Road, Suite 100 - Baltimore, MD 21222
WASHINGTON D.C. CRANE RENTAL
9701 Fallard Terrace, Upper Marlboro, MD 20772

Lifting heights
Hauteurs de levage

T

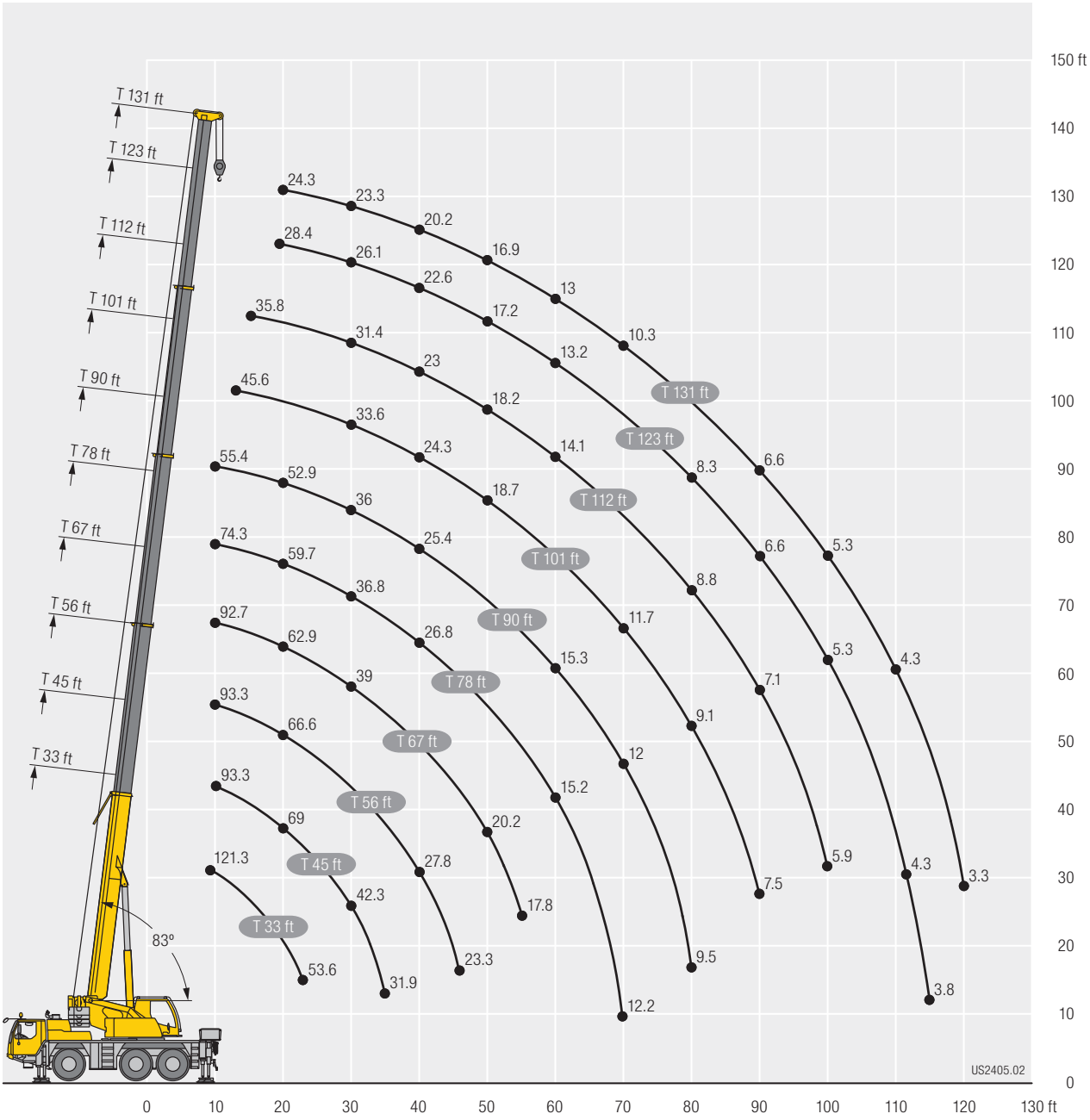

Lifting capacities
Forces de levage

TK

	33 ft			101 ft			112 ft			123 ft			129 ft			131 ft			
	31 ft			31 ft			31 ft			31 ft			31 ft			31 ft			
	0°	20°	40°	0°	20°	40°	0°	20°	40°	0°	20°	40°	0°	20°	40°	0°	20°	40°	
10	19.3																		10
11	18.8	17.6																	11
12	18.4	17.4																	12
13	18	17																	13
14	17.6	16.7																	14
15	17.2	16.4																	15
16	16.8	16.1																	16
17	16.4	15.8		19.8															17
18	16	15.5		19.8															18
19	15.6	15.2	13.9	19.8															19
20	15.2	15	13.7	19.8			18												20
22	14.4	14.4	13.3	19.8			17.9												22
24	13.7	14	12.9	19.8			17.7			14.9			13.5						24
26	12	13.5	12.5	19.7	17		17.6			14.9			13.6			13.3			26
28	10	13.1	12.2	19.4	16.7		17.5	15.4		14.8			13.6			13.3			28
30	9.7	12.7	11.9	19	16.4		17.3	15.3		14.7			13.5			13.2			30
32	9.7	12.3	11.6	18.5	16.1		17.1	15		14.7			13.5			13.2			32
34	8.9	11.9	11.3	18.1	15.8	13.5	16.9	14.8		14.6	13.4		13.4			13.1			34
36	8.1	11.6	10.9	17.7	15.5	13.3	16.7	14.6		14.5	13.3		13.2	12.6		13			36
38	7.3	11.2	10.3	17.3	15.2	13.1	16.6	14.4	12.7	14.3	13.2		13.1	12.5		12.9	12.3		38
40	6.7	10.9	10.1	16.9	15	13	16.4	14.2	12.6	14.1	13		12.9	12.4		12.7	12.2		40
45	5.1	9.8	9.7	15.9	14.4	12.6	15.9	13.7	12.2	13.6	12.7	11.6	12.5	12		12.3	11.9		45
50	4	9.3		15	13.9	12.2	15.3	13.3	11.9	12.9	12.3	11.3	12	11.5	10.8	11.8	11.4	10.5	50
55	2.9			14.1	13.4	11.9	14.3	12.9	11.6	12.3	11.7	11.1	11.5	10.8	10.2	11.1	10.8	10.2	55
60				12.7	12.9	11.5	12.6	12.5	11.3	11.8	10.9	10.3	10.8	10	9.8	10.4	10	9.7	60
65				10.2	12.2	11.2	11.2	11.8	11	11.2	10.2	10	10.1	9.5	9.4	9.9	9.5	9.4	65
70				9.7	11.3	10.8	10.2	10.6	10.4	9.9	9.8	9.6	9.5	9.2	9	9.4	9.1	9	70
75				9.4	10.2	10.1	9.6	9.4	9.8	8.9	9.3	9.2	8.8	8.8	8.7	8.7	8.8	8.7	75
80				8.4	9.1	9.5	8.7	8.9	8.8	8	8.5	8.8	7.9	8.4	8.3	7.8	8.2	8.3	80
85				7.5	8.3	8.5	7.9	8.3	8.4	7.1	7.6	8	7.1	7.5	7.9	7	7.4	7.8	85
90				6.7	7.8	7.9	7.2	7.5	7.8	6.4	6.8	7.2	6.4	6.8	7.1	6.3	6.7	7	90
95				5.9	7.1	7.2	6.5	6.8	7	5.8	6.2	6.5	5.7	6.1	6.4	5.6	6	6.3	95
100				5.2	6.5		5.9	6.1	6.3	5.2	5.5	5.8	5.1	5.5	5.8	5	5.4	5.7	100
105				4.6	5.9		5.3	5.6		4.7	5	5.2	4.6	4.9	5.2	4.5	4.8	5.1	105
110				4.1	5.3		4.8	5		4.2	4.5	4.7	4.2	4.5	4.7	4	4.4	4.5	110
115				3.6	4.8		4.4	4.6		3.8	4		3.7	4	4.2	3.6	3.9	4.1	115
120				3			3.9	4.1		3.4	3.6		3.4	3.6		3.2	3.5		120
125							3.5	3.6		2.9	3.1		3	3.2		2.9	3.1		125
130							3.1			2.6	2.7		2.6	2.8		2.5	2.7		130
135										2.2	2.4		2.2	2.4		2.1	2.3		135
140										1.9			1.9	2		1.8	2		140
145										1.7			1.6			1.6			145
150													1.4						150

t_204_01144_01_000 / 01145_01_000 / 01146_01_000

BALTIMORE, MARYLAND CRANE RENTAL
8200 Fisher Road, Suite 100 - Baltimore, MD 21222
WASHINGTON D.C. CRANE RENTAL
9701 Fallard Terrace, Upper Marlboro, MD 20772

Lifting capacities
Forces de levage

TK

	33 ft			101 ft			112 ft			123 ft			129 ft			131 ft			
	52 ft			52 ft			52 ft			52 ft			52 ft			52 ft			
	0°	20°	40°	0°	20°	40°	0°	20°	40°	0°	20°	40°	0°	20°	40°	0°	20°	40°	
10	10.3																		10
11	10.2																		11
12	10.1																		12
13	10																		13
14	9.9																		14
15	9.8																		15
16	9.7																		16
17	9.5																		17
18	9.4																		18
19	9.3																		19
20	9.2			10.5															20
22	8.9	8.2		10.4			9.3												22
24	8.7	7.9		10.3			9.2												24
26	8.4	7.7		10.2			9.2			8.1									26
28	8.2	7.5		10.1			9.1			8.1			7.6			7.5			28
30	8	7.3		10			9			8.1			7.6			7.5			30
32	7.7	7.1		9.9			9			8			7.5			7.4			32
34	7.4	7		9.7			8.9			8			7.5			7.4			34
36	7.2	6.8	6.2	9.6	8		8.8			7.9			7.5			7.4			36
38	6.9	6.6	6	9.5	7.9		8.7			7.9			7.4			7.3			38
40	6.7	6.5	5.9	9.3	7.7		8.7	7.5		7.8			7.4			7.3			40
45	6.1	6.2	5.7	9	7.5		8.4	7.2		7.7	6.8		7.3			7.2			45
50	5.5	5.9	5.5	8.6	7.2	6.1	8.2	7		7.5	6.7		7.2	6.5		7.1	6.4		50
55	5.1	5.6	5.4	8.3	7	6	8	6.8	5.9	7.4	6.5		7.1	6.3		7	6.3		55
60	4.7	5.5	5.3	8	6.7	5.8	7.7	6.6	5.7	7.2	6.3	5.6	6.9	6.2		6.8	6.1		60
65	4.4	5.3	5.3	7.6	6.6	5.7	7.5	6.4	5.7	7.1	6.2	5.5	6.8	6.1	5.4	6.7	6	5.4	65
70	4.2	5.2	5.3	7.4	6.4	5.6	7.3	6.3	5.6	6.9	6.1	5.5	6.7	5.9	5.4	6.6	5.9	5.4	70
75	4	5.2		7.1	6.2	5.5	7.1	6.1	5.5	6.7	5.9	5.4	6.5	5.8	5.3	6.5	5.8	5.3	75
80				6.9	6.1	5.5	6.9	6	5.4	6.6	5.8	5.3	6.4	5.7	5.3	6.3	5.7	5.3	80
85				6.6	5.9	5.4	6.7	5.9	5.4	6.4	5.7	5.3	6.3	5.6	5.2	6.2	5.6	5.2	85
90				6.3	5.8	5.3	6.4	5.7	5.3	6.3	5.6	5.2	6.1	5.5	5.2	6.1	5.5	5.2	90
95				6	5.7	5.3	6.1	5.6	5.3	5.9	5.5	5.2	5.9	5.4	5.1	5.8	5.4	5.1	95
100				5.7	5.6	5.3	5.8	5.5	5.2	5.4	5.4	5.1	5.3	5.4	5.1	5.2	5.4	5.1	100
105				5.4	5.5	5.3	5.5	5.4	5.2	4.8	5.3	5.1	4.8	5.3	5.1	4.7	5.2	5.1	105
110				5.1	5.3	5.3	5	5.3	5.2	4.4	4.9	5.1	4.3	4.9	5.1	4.2	4.8	5.1	110
115				4.9	5.2	5.3	4.6	5	5.2	4	4.4	4.8	3.9	4.4	4.8	3.8	4.3	4.7	115
120				4.6	4.9	5	4.2	4.6	4.8	3.6	4	4.4	3.5	4	4.3	3.4	3.9	4.2	120
125				4.2	4.4	4.6	3.8	4.1	4.3	3.2	3.6	3.9	3.1	3.6	3.9	3	3.5	3.8	125
130				3.8	4	4.1	3.4	3.7	3.9	2.9	3.2	3.5	2.8	3.2	3.5	2.7	3.1	3.4	130
135				3.4	3.6		3.1	3.4	3.5	2.5	2.9	3.1	2.5	2.9	3.1	2.4	2.8	3	135
140				3.1	3.2		2.7	3		2.2	2.5	2.7	2.2	2.5	2.7	2.1	2.4	2.6	140
145				2.8			2.4	2.6		1.9	2.2	2.3	1.9	2.2	2.4	1.8	2.1	2.3	145
150							2.2	2.3		1.6	1.9		1.6	1.9	2	1.5	1.8	1.9	150
155							1.9			1.4	1.6		1.4	1.6			1.5	1.6	155

t_204_11144_01_000 / 11145_01_000 / 11146_01_000

Lifting capacities
Forces de levage

TK

	33 ft			101 ft			112 ft			123 ft			129 ft			131 ft			
	31 ft			31 ft			31 ft			31 ft			31 ft			31 ft			
	0°	20°	40°	0°	20°	40°	0°	20°	40°	0°	20°	40°	0°	20°	40°	0°	20°	40°	
10	17.5																		10
11	17.1	16																	11
12	16.7	15.8																	12
13	16.4	15.5																	13
14	16	15.2																	14
15	15.6	14.9																	15
16	15.3	14.6																	16
17	14.9	14.4		18.5															17
18	14.5	14.1		18.5															18
19	14.2	13.8	12.6	18.5															19
20	13.8	13.6	12.4	18.5			16.3												20
22	13.1	13.1	12.1	18.5			16.3												22
24	12.4	12.7	11.7	18.3			16.2			13.5			12.3						24
26	10.9	12.3	11.4	18	15.5		16			13.5			12.3			12			26
28	9.1	11.9	11.1	17.6	15.2		15.9	14		13.5			12.3			12			28
30	8.8	11.6	10.8	17.3	14.9		15.7	13.9		13.4			12.3			12			30
32	8.8	11.2	10.5	16.9	14.6		15.6	13.7		13.3			12.2			12			32
34	8.1	10.9	10.2	16.5	14.4	12.3	15.4	13.5		13.3	12.2		12.2			11.9			34
36	7.4	10.5	9.9	16.1	14.1	12.1	15.2	13.3		13.1	12.1		12	11.4		11.8			36
38	6.7	10.2	9.4	15.8	13.9	11.9	15.1	13.1	11.6	13	12		11.9	11.3		11.7	11.2		38
40	6.1	9.9	9.2	15.4	13.6	11.8	14.9	12.9	11.4	12.9	11.8		11.7	11.3		11.6	11.1		40
45	4.7	8.9	8.8	14.5	13.1	11.4	13.9	12.5	11.2	12.3	11.5	10.6	11.3	10.9		11.2	10.8		45
50	3.6	8.4		13.1	12.6	11.1	12.1	12.1	10.8	11.8	11.2	10.3	10.9	10.4	9.9	10.7	10.4	9.5	50
55	2.6			11.3	11.8	10.8	11.3	11.3	10.5	10.4	10.7	10.1	10.1	9.8	9.3	9.9	9.8	9.3	55
60				10.5	10.6	10.4	9.9	10.1	10.2	9	9.8	9.4	9	9.1	8.9	8.8	9.1	8.9	60
65				9.1	9.3	9.8	8.7	9.2	9.2	7.9	8.6	9	7.8	8.4	8.5	7.7	8.3	8.5	65
70				8.1	8.6	8.6	7.7	8.2	8.6	6.9	7.5	8	6.8	7.4	7.9	6.7	7.3	7.8	70
75				7.1	7.6	7.9	6.8	7.2	7.6	6	6.6	7.1	6	6.5	7	5.8	6.4	6.9	75
80				6.3	6.7	7	5.9	6.4	6.7	5.3	5.8	6.2	5.2	5.7	6.2	5.1	5.6	6.1	80
85				5.6	5.9	6.1	5.2	5.6	5.9	4.6	5.1	5.4	4.6	5	5.4	4.4	4.9	5.3	85
90				4.9	5.2	5.4	4.6	4.9	5.2	4	4.4	4.8	4	4.4	4.7	3.9	4.3	4.6	90
95				4.3	4.6	4.7	4	4.3	4.5	3.5	3.9	4.1	3.4	3.8	4.1	3.3	3.7	4	95
100				3.8	4		3.5	3.7	3.9	3	3.3	3.5	3	3.3	3.6	2.9	3.2	3.5	100
105				3.3	3.5		3	3.3		2.5	2.8	3	2.5	2.8	3	2.5	2.8	3	105
110				2.9	3.1		2.6	2.8		2.1	2.4	2.6	2.1	2.4	2.6	2	2.3	2.5	110
115				2.6	2.7		2.2	2.4		1.7	2		1.7	2	2.2	1.7	1.9	2.1	115
120				2.2			1.9	2.1		1.4	1.6		1.4	1.6			1.6		120
125							1.6	1.7											125
130							1.3												130

t_204_01033_00_000 / 01042_00_000 / 01051_00_000

Lifting capacities
Forces de levage

TK

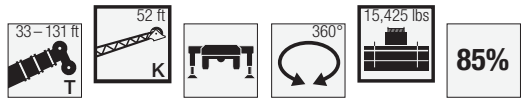

	33 ft			101 ft			112 ft			123 ft			129 ft			131 ft			
	52 ft			52 ft			52 ft			52 ft			52 ft			52 ft			
	0°	20°	40°	0°	20°	40°	0°	20°	40°	0°	20°	40°	0°	20°	40°	0°	20°	40°	
10	9.4																		10
11	9.3																		11
12	9.2																		12
13	9.1																		13
14	9																		14
15	8.9																		15
16	8.8																		16
17	8.7																		17
18	8.6																		18
19	8.5																		19
20	8.3			9.6															20
22	8.1	7.4		9.5			8.4												22
24	7.9	7.2		9.4			8.4												24
26	7.7	7		9.3			8.4			7.4									26
28	7.5	6.8		9.2			8.3			7.4			6.9			6.8			28
30	7.2	6.7		9.1			8.2			7.3			6.9			6.8			30
32	7	6.5		9			8.2			7.3			6.8			6.8			32
34	6.8	6.3		8.9			8.1			7.2			6.8			6.7			34
36	6.5	6.2	5.6	8.7	7.3		8			7.2			6.8			6.7			36
38	6.3	6	5.5	8.6	7.2		8			7.2			6.7			6.7			38
40	6.1	5.9	5.4	8.5	7.1		7.9	6.8		7.1			6.7			6.6			40
45	5.5	5.6	5.2	8.2	6.8		7.7	6.6		7	6.2		6.6			6.5			45
50	5	5.4	5	7.9	6.6	5.6	7.5	6.4		6.9	6.1		6.5	5.9		6.4	5.8		50
55	4.6	5.1	4.9	7.5	6.3	5.4	7.3	6.2	5.3	6.7	5.9		6.4	5.7		6.3	5.7		55
60	4.3	5	4.8	7.2	6.1	5.3	7.1	6	5.2	6.6	5.8	5.1	6.3	5.6		6.2	5.6		60
65	4	4.9	4.8	6.9	6	5.2	6.8	5.8	5.1	6.4	5.6	5	6.2	5.5	5	6.1	5.5	5	65
70	3.8	4.8	4.8	6.7	5.8	5.1	6.6	5.7	5	6.3	5.5	4.9	6.1	5.4	4.9	6	5.4	4.9	70
75	3.6	4.7		6.5	5.7	5	6.2	5.6	5	6.1	5.4	4.9	5.8	5.3	4.8	5.7	5.3	4.8	75
80				6.1	5.5	5	6	5.4	4.9	5.5	5.3	4.8	5.3	5.2	4.8	5.2	5.2	4.8	80
85				5.8	5.4	4.9	5.5	5.3	4.9	4.8	5.2	4.8	4.7	5.1	4.7	4.6	5.1	4.7	85
90				5.2	5.2	4.9	4.9	5.2	4.8	4.2	4.9	4.7	4.1	4.8	4.7	4	4.7	4.7	90
95				4.7	5	4.8	4.3	4.9	4.8	3.7	4.4	4.7	3.6	4.3	4.7	3.5	4.2	4.7	95
100				4.1	4.6	4.8	3.8	4.4	4.7	3.2	3.9	4.4	3.2	3.8	4.3	3	3.7	4.2	100
105				3.7	4.1	4.4	3.3	3.8	4.2	2.8	3.4	3.9	2.7	3.3	3.8	2.6	3.2	3.7	105
110				3.2	3.7	3.9	2.9	3.4	3.7	2.4	3	3.4	2.4	2.9	3.4	2.3	2.8	3.3	110
115				2.9	3.2	3.5	2.5	3	3.2	2.1	2.6	2.9	2	2.5	2.9	1.9	2.4	2.8	115
120				2.5	2.8	3	2.2	2.6	2.8	1.7	2.2	2.5	1.7	2.2	2.5	1.6	2.1	2.4	120
125				2.2	2.5	2.6	1.9	2.2	2.4	1.4	1.8	2.1	1.4	1.8	2.1		1.8	2.1	125
130				1.9	2.1	2.2	1.6	1.9	2		1.5	1.7		1.5	1.7		1.5	1.7	130
135				1.7	1.8		1.3	1.6	1.7			1.4			1.4			1.4	135
140				1.4	1.5														140

t_204_11033_00_000 / 11042_00_000 / 11051_00_000

Lifting capacities
Forces de levage

TK

	33 ft			101 ft			112 ft			123 ft			129 ft			131 ft			
	31 ft			31 ft			31 ft			31 ft			31 ft			31 ft			
	0°	20°	40°	0°	20°	40°	0°	20°	40°	0°	20°	40°	0°	20°	40°	0°	20°	40°	
10	17.5																		10
11	17.1	16																	11
12	16.7	15.8																	12
13	16.4	15.5																	13
14	16	15.2																	14
15	15.6	14.9																	15
16	15.3	14.6																	16
17	14.9	14.4		18.5															17
18	14.5	14.1		18.5															18
19	14.2	13.8	12.6	18.5															19
20	13.8	13.6	12.4	18.5			16.3												20
22	13.1	13.1	12.1	18.5			16.3												22
24	12.4	12.7	11.7	18.3			16.2			13.5			12.3						24
26	10.9	12.3	11.4	18	15.5		16			13.5			12.3			12			26
28	9.1	11.9	11.1	17.6	15.2		15.9	14		13.5			12.3			12			28
30	8.8	11.6	10.8	17.3	14.9		15.7	13.9		13.4			12.3			12			30
32	8.8	11.2	10.5	16.9	14.6		15.6	13.7		13.3			12.2			12			32
34	8.1	10.9	10.2	16.5	14.4	12.3	15.4	13.5		13.3	12.2		12.2			11.9			34
36	7.4	10.5	9.9	16.1	14.1	12.1	15.2	13.3		13.1	12.1		12	11.4		11.8			36
38	6.7	10.2	9.4	15.8	13.9	11.9	15.1	13.1	11.6	13	12		11.9	11.3		11.7	11.2		38
40	6.1	9.9	9.2	15.4	13.6	11.8	14.7	12.9	11.4	12.9	11.8		11.7	11.3		11.6	11.1		40
45	4.7	8.9	8.8	13.7	13.1	11.4	12.8	12.5	11.2	12.3	11.5	10.6	11.3	10.9		11.2	10.8		45
50	3.6	8.4		12.1	12.3	11.1	11.6	11.8	10.8	10.8	11.2	10.3	10.5	10.4	9.9	10.4	10.4	9.5	50
55	2.6			10.8	11	10.8	10.1	10.7	10.5	9.3	10.1	10.1	9.2	9.8	9.3	9	9.8	9.3	55
60				9.5	10	10.1	8.8	9.5	10	8	8.8	9.3	7.9	8.7	8.9	7.8	8.6	8.9	60
65				8.3	8.9	9	7.7	8.3	8.8	6.9	7.6	8.2	6.9	7.5	8.1	6.7	7.4	8	65
70				7.3	7.7	8.1	6.7	7.3	7.8	6	6.6	7.1	5.9	6.6	7.1	5.8	6.4	7	70
75				6.4	6.8	7.1	5.9	6.4	6.8	5.2	5.8	6.2	5.1	5.7	6.2	5	5.6	6.1	75
80				5.5	5.9	6.2	5.2	5.6	6	4.5	5	5.4	4.4	4.9	5.4	4.3	4.8	5.3	80
85				4.9	5.2	5.5	4.5	4.9	5.2	3.9	4.3	4.7	3.8	4.3	4.7	3.7	4.2	4.6	85
90				4.2	4.6	4.7	3.9	4.3	4.5	3.3	3.7	4	3.3	3.7	4	3.2	3.6	3.9	90
95				3.7	4	4.1	3.3	3.7	3.9	2.8	3.2	3.5	2.8	3.2	3.5	2.7	3.1	3.4	95
100				3.2	3.5		2.9	3.2	3.4	2.4	2.7	3	2.4	2.7	3	2.2	2.6	2.9	100
105				2.8	3		2.5	2.7		2	2.3	2.5	2	2.3	2.5	1.9	2.2	2.4	105
110				2.4	2.6		2.1	2.3		1.6	1.9	2	1.6	1.9	2.1	1.5	1.8	2	110
115				2.1	2.2		1.7	1.9			1.5			1.5	1.7		1.4	1.6	115
120				1.8			1.4	1.6											120

t_204_01036_00_000 / 01045_00_000 / 01054_00_000

ML CRANE GROUP
UNITED
CRANE & RIGGING
BALTIMORE, MARYLAND
410-285-6363
WASHINGTON D.C.
301-909-0516
WWW.UNITEDCRANEANDRIGGING.COM

Lifting capacities
Forces de levage

TK

	33 ft			101 ft			112 ft			123 ft			129 ft			131 ft			
	52 ft			52 ft			52 ft			52 ft			52 ft			52 ft			
	0°	20°	40°	0°	20°	40°	0°	20°	40°	0°	20°	40°	0°	20°	40°	0°	20°	40°	
10	9.4																		10
11	9.3																		11
12	9.2																		12
13	9.1																		13
14	9																		14
15	8.9																		15
16	8.8																		16
17	8.7																		17
18	8.6																		18
19	8.5																		19
20	8.3			9.6															20
22	8.1	7.4		9.5			8.4												22
24	7.9	7.2		9.4			8.4												24
26	7.7	7		9.3			8.4			7.4									26
28	7.5	6.8		9.2			8.3			7.4			6.9			6.8			28
30	7.2	6.7		9.1			8.2			7.3			6.9			6.8			30
32	7	6.5		9			8.2			7.3			6.8			6.8			32
34	6.8	6.3		8.9			8.1			7.2			6.8			6.7			34
36	6.5	6.2	5.6	8.7	7.3		8			7.2			6.8			6.7			36
38	6.3	6	5.5	8.6	7.2		8			7.2			6.7			6.7			38
40	6.1	5.9	5.4	8.5	7.1		7.9	6.8		7.1			6.7			6.6			40
45	5.5	5.6	5.2	8.2	6.8		7.7	6.6		7	6.2		6.6			6.5			45
50	5	5.4	5	7.9	6.6	5.6	7.5	6.4		6.9	6.1		6.5	5.9		6.4	5.8		50
55	4.6	5.1	4.9	7.5	6.3	5.4	7.3	6.2	5.3	6.7	5.9		6.4	5.7		6.3	5.7		55
60	4.3	5	4.8	7.2	6.1	5.3	7.1	6	5.2	6.6	5.8	5.1	6.3	5.6		6.2	5.6		60
65	4	4.9	4.8	6.9	6	5.2	6.8	5.8	5.1	6.4	5.6	5	6.2	5.5	5	6.1	5.5	5	65
70	3.8	4.8	4.8	6.7	5.8	5.1	6.4	5.7	5	6.1	5.5	4.9	5.9	5.4	4.9	5.7	5.4	4.9	70
75	3.6	4.7		6.3	5.7	5	6.1	5.6	5	5.4	5.4	4.9	5.3	5.3	4.8	5.1	5.3	4.8	75
80				5.9	5.5	5	5.4	5.4	4.9	4.7	5.3	4.8	4.6	5.2	4.8	4.5	5.2	4.8	80
85				5.2	5.3	4.9	4.8	5.2	4.9	4.1	4.9	4.8	4	4.8	4.7	3.9	4.7	4.7	85
90				4.6	5.1	4.9	4.2	4.9	4.8	3.5	4.3	4.7	3.5	4.2	4.7	3.3	4.1	4.7	90
95				4	4.6	4.8	3.7	4.3	4.7	3.1	3.8	4.3	3	3.7	4.3	2.9	3.6	4.2	95
100				3.6	4.1	4.4	3.2	3.8	4.2	2.6	3.3	3.8	2.6	3.2	3.7	2.4	3.1	3.6	100
105				3.1	3.6	3.9	2.8	3.3	3.7	2.2	2.8	3.3	2.2	2.8	3.2	2.1	2.7	3.2	105
110				2.7	3.1	3.4	2.4	2.9	3.2	1.8	2.4	2.8	1.8	2.4	2.8	1.7	2.3	2.7	110
115				2.4	2.7	2.9	2	2.5	2.8	1.5	2	2.4	1.5	2	2.4	1.4	1.9	2.3	115
120				2	2.4	2.5	1.7	2.1	2.3		1.7	2		1.6	2		1.6	1.9	120
125				1.8	2	2.1	1.4	1.8	2		1.4	1.6			1.6			1.6	125
130				1.5	1.7	1.8		1.5	1.6										130
135					1.4														135

t_204_11036_00_000 / 11045_00_000 / 11054_00_000

BALTIMORE, MARYLAND CRANE RENTAL
8200 Fisher Road, Suite 100 - Baltimore, MD 21222
WASHINGTON D.C. CRANE RENTAL
9701 Fallard Terrace, Upper Marlboro, MD 20772

Lifting heights
Hauteurs de levage

TK

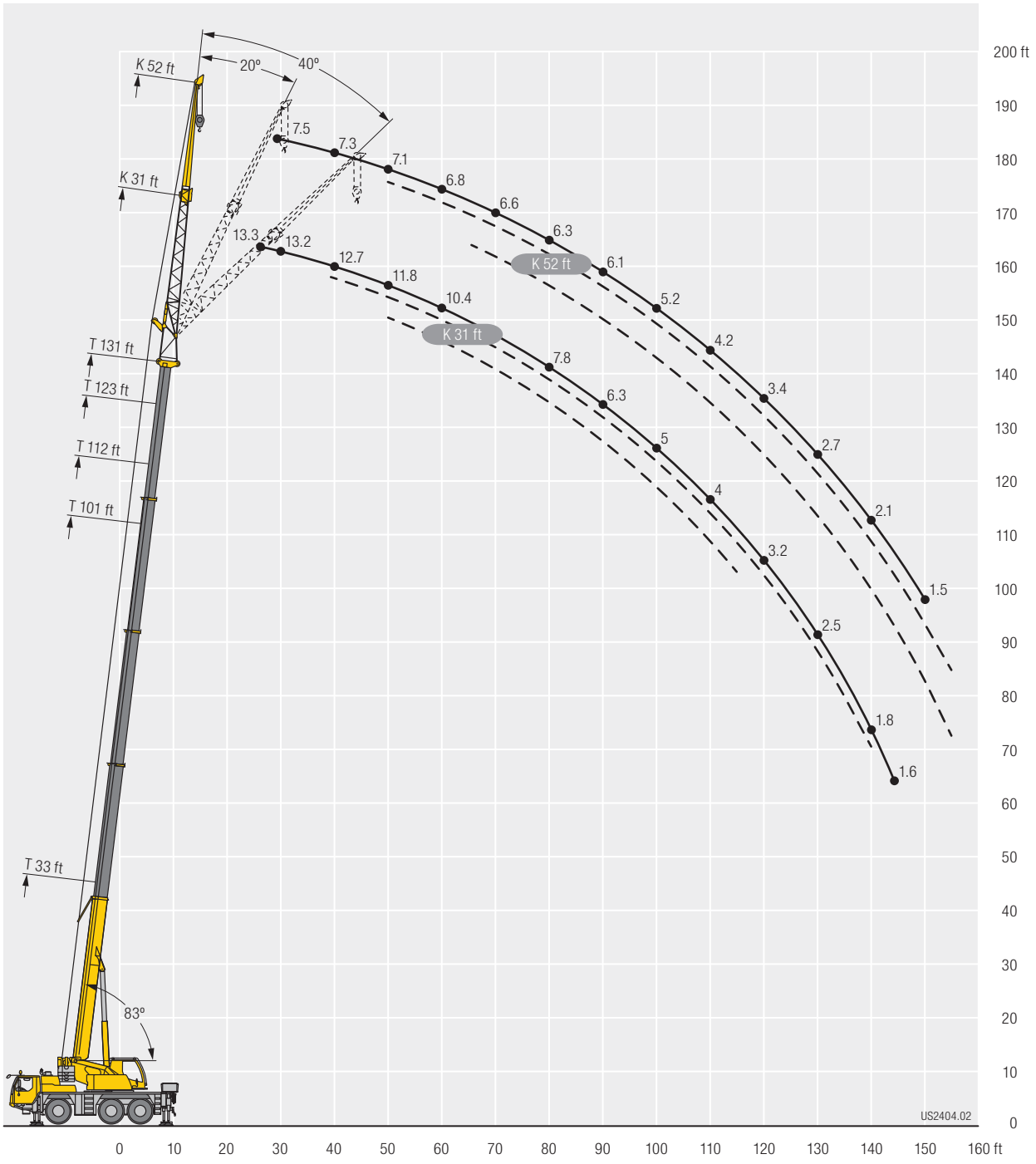

BALTIMORE, MARYLAND CRANE RENTAL
8200 Fisher Road, Suite 100 - Baltimore, MD 21222
WASHINGTON D.C. CRANE RENTAL
9701 Fallard Terrace, Upper Marlboro, MD 20772

ML CRANE GROUP
UNITED
CRANE & RIGGING
BALTIMORE, MARYLAND
410-285-6363
WASHINGTON D.C.
301-909-0516
WWW.UNITEDCRANEANDRIGGING.COM

Lifting capacities
Forces de levage

TK

	33 ft	45 ft	56 ft	67 ft	78 ft	90 ft	101 ft	112 ft	123 ft	131 ft	
	8 ft										
10	39	39	39	39							10
11	39	39	39	39							11
12	39	39	39	39							12
13	39	39	39	39	39						13
14	39	39	39	39	39						14
15	39	39	39	39	39						15
16	39	39	39	39	39	39					16
17	39	39	39	39	39	39					17
18	39	39	39	39	39	39					18
19	39	39	39	39	39	39					19
20	38.3	39	39	39	39	39	38.5				20
22	35.4	39	39	39	39	39	37.6				22
24	32.4	39	39	39	39	39	36.6	29.5			24
26	29.2	39	39	39	39	38.9	35.5	28.9	23.5		26
28	26.8	37.1	39	39	38.8	37.5	34.2	28.1	23.1	19.7	28
30	24.4	34.8	38.5	38.1	36.3	34.5	32.7	27.2	22.6	19.4	30
32	22.3	32.4	36.2	35.7	33.7	32.4	30.7	26.4	21.9	19	32
34		30	33.7	33	31.2	30.1	28.5	25.6	21.3	18.6	34
36		27.9	32.1	30.7	29	28	26.4	24.9	20.7	18.2	36
38		26.1	30	28.7	27	26.2	24.7	23.8	20.2	17.8	38
40		24.3	28.1	26.8	25.5	24.9	23.7	22.7	19.7	17.4	40
45			23.9	23	21.9	21.6	20.6	19.6	18.4	16.5	45
50			20.3	20.1	19.8	18.8	17.9	17.4	16.9	15.6	50
55			17.6	17.3	17.6	16.5	16	15.7	14.8	14.5	55
60				15.1	15.5	14.5	14.3	13.9	13	12.9	60
65				14	13.6	13.2	13	12.4	11.5	11.4	65
70					12.1	12.1	11.7	11.1	10.2	10.2	70
75					10.9	10.9	10.4	9.9	9.1	9.1	75
80						9.5	9.1	8.8	8.2	8.1	80
85						8.6	8.2	7.9	7.3	7.3	85
90							7.4	7.1	6.6	6.5	90
95							6.7	6.4	5.9	5.9	95
100							6.1	5.8	5.3	5.3	100
105								5.2	4.7	4.7	105
110								4.7	4.1	4.2	110
115									3.7	3.7	115
120									3.2	3.2	120
125										2.8	125
130										2.5	130

t_204_01147_01_000

BALTIMORE, MARYLAND CRANE RENTAL
8200 Fisher Road, Suite 100 - Baltimore, MD 21222
WASHINGTON D.C. CRANE RENTAL
9701 Fallard Terrace, Upper Marlboro, MD 20772

Lifting capacities
Forces de levage

TK

	33 ft	45 ft	56 ft	67 ft	78 ft	90 ft	101 ft	112 ft	123 ft	131 ft	
	8 ft										
10	39	39	39	39							10
11	39	39	39	39							11
12	39	39	39	39							12
13	39	39	39	39	39						13
14	39	39	39	39	39						14
15	39	39	39	39	39						15
16	39	39	39	39	39	39					16
17	39	39	39	39	39	39					17
18	39	39	39	39	39	39					18
19	39	39	39	39	39	39					19
20	38.3	39	39	39	39	39	35				20
22	35.5	39	39	39	39	38.9	34.2				22
24	32.4	39	39	38.6	38.5	36.3	33.1	26.8			24
26	29.2	38.8	37.9	37.7	35.4	33.5	30.8	26.2	21.4		26
28	26.8	35.1	34.8	34.3	32.1	30.8	28.5	25.5	21	17.9	28
30	24.4	31.4	32.1	31.4	29.4	28.2	26.3	24.8	20.6	17.6	30
32	22.4	28.6	29	28.7	27.3	26.5	24.8	23.5	20	17.3	32
34		26	26.3	26.2	25.1	24.5	23.3	21.8	19.4	16.9	34
36		23.7	24	23.9	23.5	22.7	21.5	20.2	18.8	16.6	36
38		21.8	22.1	21.9	22.3	21	20	18.9	18.4	16.2	38
40		20	20.3	20.2	20.7	19.6	18.6	18.3	17.3	15.8	40
45			16.8	17.2	17	16.5	16.4	15.7	14.7	14.5	45
50			14.1	14.6	14.3	14.4	14.2	13.5	12.6	12.4	50
55			12	12.4	12.3	12.3	12.1	11.7	10.8	10.7	55
60				10.8	10.7	10.6	10.4	10.2	9.4	9.3	60
65				9.4	9.3	9.3	9	8.8	8.1	8.1	65
70					8.2	8.2	7.9	7.6	7.1	7	70
75					7.2	7.2	6.9	6.6	6.2	6.2	75
80						6.4	6.1	5.8	5.3	5.4	80
85						5.6	5.3	5.1	4.6	4.6	85
90							4.6	4.4	3.9	4	90
95							4.1	3.8	3.3	3.4	95
100							3.6	3.3	2.8	2.9	100
105								2.9	2.4	2.4	105
110								2.5	1.9	2	110
115									1.6	1.6	115

t_204_01060_00_000

BALTIMORE, MARYLAND CRANE RENTAL
8200 Fisher Road, Suite 100 - Baltimore, MD 21222
WASHINGTON D.C. CRANE RENTAL
9701 Fallard Terrace, Upper Marlboro, MD 20772

Lifting capacities
Forces de levage

TK

	33 ft	45 ft	56 ft	67 ft	78 ft	90 ft	101 ft	112 ft	123 ft	131 ft	
	8 ft										
10	39	39	39	39							10
11	39	39	39	39							11
12	39	39	39	39							12
13	39	39	39	39	39						13
14	39	39	39	39	39						14
15	39	39	39	39	39						15
16	39	39	39	39	39	39					16
17	39	39	39	39	39	39					17
18	39	39	39	39	39	39					18
19	39	39	39	39	39	39					19
20	38.3	39	39	39	39	39	35				20
22	35.5	39	39	38.9	39	36.8	33.8				22
24	32.4	39	38.4	38.1	36.5	34.3	30.9	26.8			24
26	29.2	37.1	36	35.1	33	31.4	28.4	26.2	21.4		26
28	26.8	32.8	33.5	31.9	30.1	28.7	26.9	24.8	21	17.9	28
30	24.4	29.6	30.1	29	27.4	26.7	25.1	23.1	20.6	17.6	30
32	22.4	26.7	27.1	26.5	25.5	24.4	23.1	21.5	20	17.3	32
34		24.2	24.6	24.3	24	22.5	21.3	20.3	19.3	16.9	34
36		22	22.3	22.2	22.2	20.8	20.1	19.4	18.2	16.6	36
38		20	20.4	20.5	20.6	19.2	18.8	18.2	16.9	16.2	38
40		18.3	18.7	19.2	19	17.9	17.8	16.9	15.8	15.4	40
45			15.4	15.8	15.6	15.8	15	14.3	13.2	13.1	45
50			12.9	13.3	13.2	13.2	12.9	12.2	11.3	11.2	50
55			10.9	11.3	11.3	11.2	11	10.5	9.7	9.6	55
60				9.8	9.7	9.7	9.4	9.1	8.3	8.2	60
65				8.5	8.4	8.4	8.1	7.9	7.1	7.1	65
70					7.3	7.3	7.1	6.8	6.2	6.1	70
75					6.5	6.4	6.1	5.9	5.3	5.3	75
80						5.6	5.3	5	4.6	4.6	80
85						4.9	4.6	4.3	3.9	3.9	85
90							4	3.7	3.2	3.3	90
95							3.5	3.2	2.7	2.8	95
100							3	2.7	2.2	2.3	100
105								2.3	1.8	1.9	105
110								1.9			110

t_204_01063_00_000

BALTIMORE, MARYLAND CRANE RENTAL
8200 Fisher Road, Suite 100 - Baltimore, MD 21222
WASHINGTON D.C. CRANE RENTAL
9701 Fallard Terrace, Upper Marlboro, MD 20772

Lifting heights
Hauteurs de levage

TK

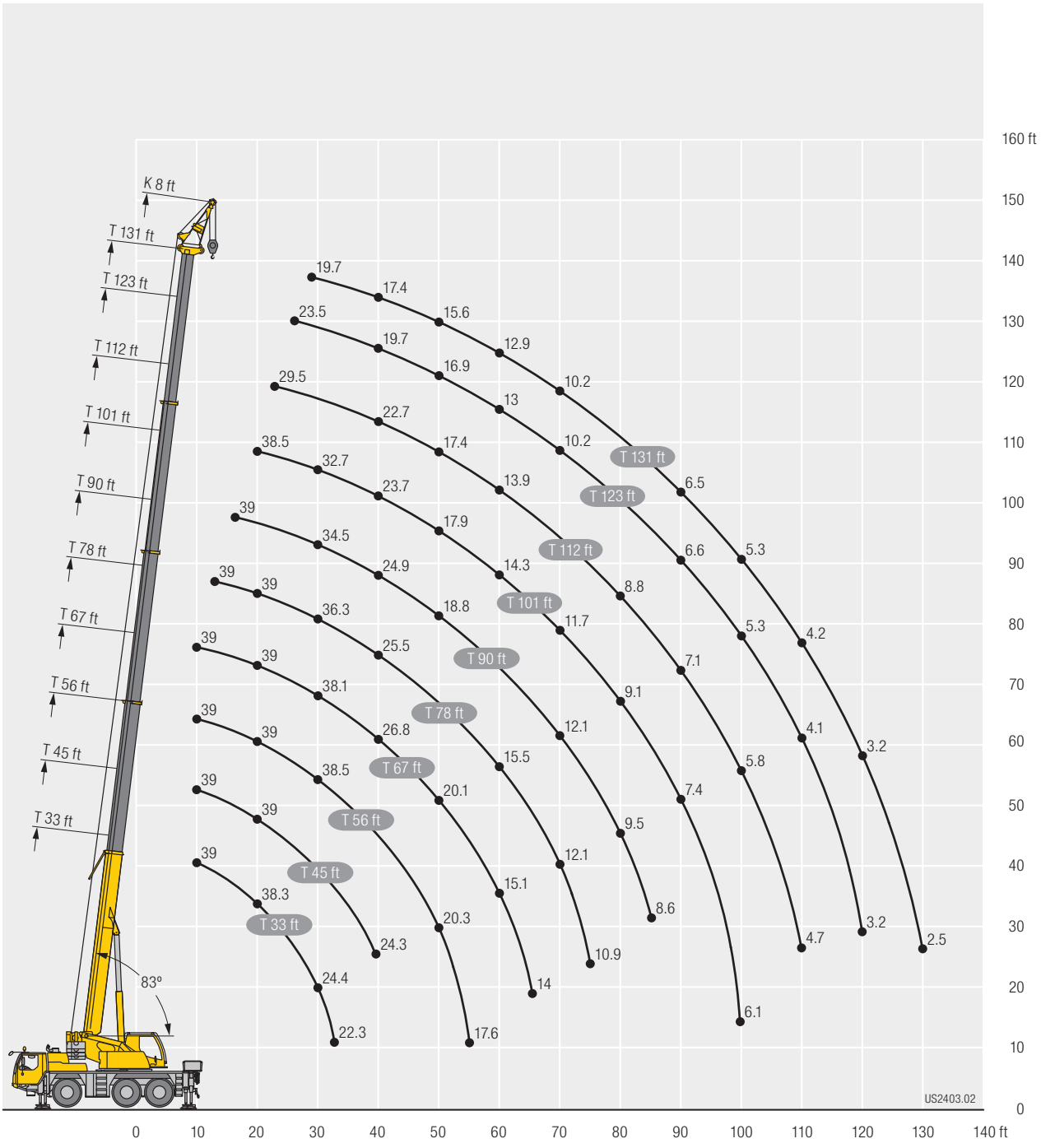

Equipment
Equipement

Crane carrier

Frame	Liebherr designed and manufactured, box-type, torsion resistant design of hightensile fine grained structural steel.
Outriggers	4-point supporting system, hydraulically telescopable into horizontal and vertical direction. Operation with remote control, automatic support leveling, electronic inclination display.
Engine	6-cylinder Diesel, make Liebherr, watercooled, output 270 kW (367 h.p.), max. torque 1449 lbs-ft. Exhaust emissions acc. to (EU) 2016/1628, EPA/CARB or ECE-R.96. Electronic engine management. Fuel reservoir: 92 gallons.
Transmission	ZF 12-speed gear box with automatic control system. Two-stage transfer case with lockable transfer differential.
Axles	All axles steered, axle 2 and 3 driven with lockable differential gears.
Suspension	All axles with hydropneumatic suspension and hydraulic locking facility.
Tyres	6 tyres. Tyre size: 445/95 R 25 (16.00 R 25).
Steering	2-circuit system with hydraulic servo steering. Active speed depending rear axle steering, special steering programs for various driving situations.
Brakes	Service brake: all-wheel servo-air brake, all axles are equipped with disc brakes, dual circuit. Hand brake: Spring-loaded, acting on all wheels of axles 1, 2 and 3. Sustained-action brake: Exhaust retarder with additional Liebherr braking system.
Driver's cab	Spacious corrosion resistant with comfort furnishings, mounted on rubber shock absorbers, safety glazing.
Electrical system	Modern data bus technique, 24 Volt DC, 2 batteries of 170 Ah each.

Crane superstructure

Frame	Liebherr-made, torsion-resistant, welded construction of high-tensile structural steel, single-row ball bearing slewing ring.
Crane drive	Diesel-hydraulic with 1 axial variable displacement pump with automatic capacity control, 1 double gear pump, driven by the carrier Diesel engine, open regulated oil circuits with electrically controlled "load sensing", operation of 4 movements simultaneously.
Control	Electrical control of drives by self-centering joysticks, armrest-integrated control elements, Liebherr system bus (LSB).
Hoist gear	Axial piston fixed displacement motor, hoist drum with integrated planetary gear and spring-loaded static brake, actuation by open regulated oil circuit.
Luffing gear	1 differential ram with pilot operated brake valve.
Slewing gear	Axial piston fixed displacement motor, planetary gear, spring-loaded static brake. Slewing gear invertible from released to locked as a standard feature.
Crane cab	Large screen area, compound glass, comfort furnishing, cabin tiltable 20° to rear.
Safety devices	LICCON2 safe load indicator, hoist limit switch, safety valves against pipe and hose rupture, test system for servicing.
Telescopic boom	1 base section and 4 telescopic sections. All telescopic sections extendable hydraulically and independently from one another. Rapid-cycle telescoping system TELEMATIK. Boom length: 33 ft – 131 ft.
Counterweight	15,425 lbs
Electrical system	Modern data bus technique, 24 Volt DC.

Operating modes

K	Single folding jib, 31 ft Double swing-away jib 31 ft – 52 ft Adjustment 0°, 20°, 40°
K	Erection jib 8 ft with steel cable pulleys.

Additional equipment

Additional counterweight	11,025 lbs for a total counterweight of 26,450 lbs.
Tyres	6 tyres. Tyre size: 525/80 R 25 (20.5 R 25).
Drive 6 x 6	Axle 1 additionally driven.
2nd hoist gear	For two-hook operation or for operation with swing-away jib if the hoist rope shall remain reeved.

Other items of equipment available on request.

The pictures contain also accessories and special equipment not included in the standard scope of delivery.

Equipment
Equipement

Châssis porteur

Cadre	Fabrication Liebherr, construction en caisson indéformable, en acier à haute résistance à grains fins.
Calage	Dispositif de calage horizontal et vertical en 4 points, entièrement déployable hydrauliquement. Utilisation avec commande à distance, mise à niveau automatique du calage, inclinomètre électronique.
Moteur	Moteur diesel, 6 cylindres, fabriqué par Liebherr, à refroidissement par eau, de 270 kW (367 ch), couple max. 1449 lbs-ft. Emissions des gaz d'échappement conformes aux directives (EU) 2016/1628, EPA/CARB ou ECE-R.96. Gestion électronique. Capacité du réservoir à carburant: 92 gallons.
Boîte de vitesse	Boîte de vitesses ZF à 12 rapports, mécanisme automatisé à commande. Boîte de transfert à 2 étages avec blocage de différentiel.
Essieux	Tous les essieux sont directeurs, les essieux 2 et 3 sont entraînés par des engrenages différentiels blocables.
Suspension	Tous les essieux sont suspendus hydropneumatiquement et blocable hydrauliquement.
Pneumatiques	6 roues. Taille: 445/95 R 25 (16.00 R 25).
Direction	2 circuits avec direction assistée hydraulique. Direction active des essieux arrière et dépendante de la vitesse, programmes de direction spéciaux pour les différents modes de déplacement.
Freins	Freins de service: servofrein à air comprimé, tous les essieux sont munis de freins à disque, à 2 circuits. Frein à main: par cylindres à ressorts, agissant sur les roues des essieux 1, 2 et 3. Frein à régime continu: Ralentisseur sur échappement avec système de freinage additionnel Liebherr.
Cabine	Spacieuse cabine, traitement anticorrosion, équipement «grand confort», suspension par silentblocs, vitrage de sécurité.
Installation électrique	Technique moderne de transmission de données par BUS de données, courant continu 24 Volts, 2 batteries de 170 Ah chacune.

Partie tournante

Cadre	Fabrication Liebherr, construction mécanosoudée en tôle d'acier à haute résistance à grains fins. Couronne d'orientation à 1 rangée de billes.
Entraînement	Diesel hydraulique avec 1 pompe double à débit variable et régulation de puissance automatique, 1 pompe à engrenages double, entraînés par le moteur Diesel du porteur, circuits hydrauliques ouverts avec «load sensing», régulé électriquement. 4 mouvements simultanés practicables.
Commande	Commande électrique des mécanismes par leviers de manoeuvre à centrage automatique, commandes de grue „grand confort" intégrées aux accoudoirs du siège, Liebherr système bus.
Mécanisme de levage	Moteur hydraulique à cylindrée constante, treuil à réducteur planétaire incorporé et frein d'arrêt à ressort, en circuit hydraulique ouvert ou fermé et régulé.
Mécanisme de relevage	1 vérin différentiel avec clapet de frein commandé.
Dispositif de rotation	Moteur à cylindrée constante à pistons axiaux, engrenage planétaire, frein d'arrêt commandé par ressort. Orientation de série commutable en circuit hydraulique ouvert ou fermé (freinage automatique ou au pied).
Cabine de grue	Large champ de vision, vitrage de sécurité, équipement pour un confort idéal, cabine inclinable de 20° vers l'arrière.
Dispositif de sécurité	Contrôleur de charge LICCON2, fin de course crochet haut, clapets de sécurité en cas de ruptures de flexibles. Système de test pour faciliter l'entretien.
Flèche télescopique	1 élement de base et 4 élements télescopiques. Chaque élement télescopable indépendamment de l'autre. Système de télescopage TELEMATIK séquentiel rapide. Longueur de flèche: 33 ft – 131 ft.
Contrepoids	15,425 lbs
Installation électrique	Technique moderne de transmission de données par BUS de données, courant continu 24 Volts.

Modes de fonctionnement

K	Fléchette pliante simple, longueur 31 ft Double fléchette pliante 31 ft – 52 ft Positionnement à 0°, 20°, 40°
K	Fléchette de montage 8 ft avec poulies de cable en acier.

Equipement supplémentaire

Contrepoids additionnel	11,025 lbs pour un contrepoids total de 26,450 lbs.
Pneumatiques	6 roues. Taille: 525/80 R 25 (20.5 R 25).
Entraînement 6 x 6	Essieu 1 est entraîné additionnellement.
2ème mécanisme de levage	Pour l'utilisation du deuxieme crochet, ou bien pour une utilisation avec flechette pliante lorsque le cable de levage principal rest moufle.

Autres équipements supplémentaires sur demande.

Les figures contiennent également des accessoires et des équipements spéciaux non inclus de série dans la livraison.

Description of symbols
Explication des symboles

General symbols/Symboles généraux

	Outriggers Calage
	Outriggers – free on tyres Calage – libre sur pneus
	Axle Essieu
	Radius Portée
	Boom length Longueur de la flèche
	Boom position Position de la flèche
	Counterweight Contrepoids
	Tyres Pneumatiques
	Slewing gear / Working area Mécanisme d'orientation / Plage de travail
	Standard Norme
	Driving speed Vitesse de translation

	Driving speed – Onroad gear Vitesse de translation – Vitesse de route
	Driving speed – Crawl speed Vitesse de translation – Marche lente
	Max. lifting capacity Capacité max.
	Transmission Boîte de vitesse
	Gear Vitesse
	Hookblock / Capacity Moufle à crochet / Capacité de charge
	Hoist gear Treuil de levage
	Crane carrier Châssis porteur
	Crane superstructure Partie tournante de la grue
	Gradability Aptitude à gravir les pentes

Crane specific symbols/Symboles spécifiques à la grue

	Telescopic boom Flèche télescopique
	Swing away jib Fléchette pliante

	Erection jib Flechette de montage

Subject to modification / Sous réserve de modifications

Liebherr-Werk Ehingen GmbH
Postfach 1361, 89582 Ehingen, Germany
☎ +49 73 91 5 02-0, Fax +49 73 91 5 02-33 99
www.liebherr.com, E-mail: info.lwe@liebherr.com
www.facebook.com/LiebherrConstruction

Printed in Germany (1) lwe-td-204-02-us03-2019